FLEXTRACK 45 PRO
WELDING CARRIAGE

For linear seams and orbital applications
Welding processes: MIG/MAG, CMT

LINEAR SEAM OR ORBITAL. STEEL GIRDER OR TANK. PERFECT SEAMS WITH FLEXTRACK.

Whether on the construction site or in the factory, in bridge and steel construction, boiler, container, ship, rail vehicle or crane construction – the FlexTrack 45 Pro lends a consistently high and reproducible quality to both MIG/MAG and CMT processes.

What's your welding challenge?
Let's get connected.

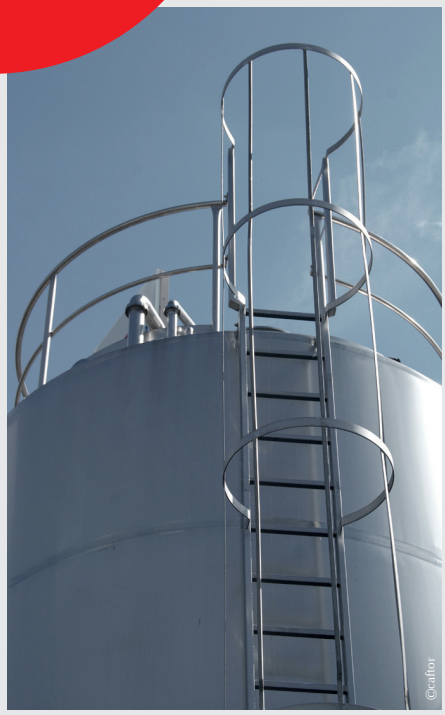

Versatile
Modular
Convenient

MOTORISED SLIDES

Automatic adjustment of the distance between the welding torch and the workpiece (control of the arc length - ACC)

TORCH OSCILLATION UNIT

- Linear for butt welds
- Radial for fillet welds

SEAM TRACKING

Mechanical horizontal & vertical seam tracking.

TORCH

Five different welding torches are compatible:

- Multilock
- Robacta
- Robacta Drive
- CMT Drive
- Manual torch

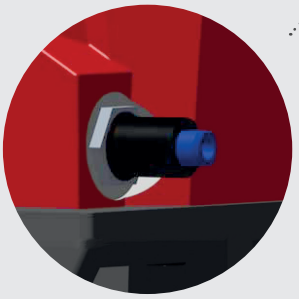

LIMIT SWITCH

Fitted to both sides of the carriage for automatic stopping or changing of direction.

BRIDGES

- Magnetic bridge with fixing lever
- Vacuum bridge
- Bridge with adjustable foot

COUPLING ON/OFF

Allows rapid manual positioning of the carriage.

FLEXTRACK 45 PRO
SYSTEM AND HIGHLIGHTS

Compact, robust, flexible.
For use under tough conditions.
Quick and easy assembly.
Various rail configurations.
Optional with torch oscillation unit or module to control the arc length (ACC).
Constant welding speed.
Compatible with the latest generation of TPS/i power sources.

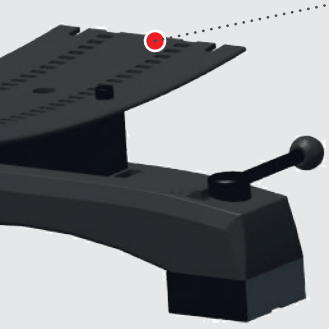

RAILS

Three different rail types are available:
- Flexible rails
- Straight rails
- Ring rails

REMOTE CONTROL BASIC & PRO

With magnetic holder for securing to magnetic materials.

MAINS CABLE

- 230 V, 50-60 Hz
- 115 V, 50-60 Hz

CONTROL BOX

Carriage and remote control are connected to the control box.

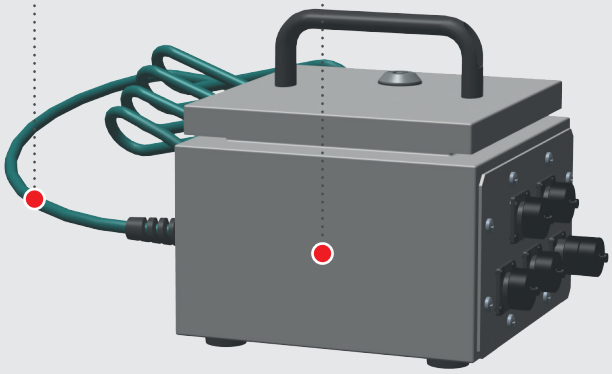

RING FLEXTRACK 4
480 - 660 mm

REMOTE CONTROL BASIC/PRO

FUNCTIONAL OVERVIEW

/ Touchscreen and function dial (FRC-45 PRO only)
/ Choice of languages: DE, EN, ES, FR, PL (FRC-45 PRO only)
/ Welding mode (with/without arc)
/ Communication with TPS/i power sources
/ Setting the power source parameters (only FRC-45 Pro and TPS/i)
/ Direction of travel
/ Travel speed
/ Offset
/ Oscillation mode
/ Oscillation speed
/ Oscillation path
/ Dwell time
/ End-crater filling
/ Monitoring the arc length (ACC)
/ Linear seam and orbital segment welding

FRC-45 BASIC

FRC-45 PRO

REMOTE CONVENIENCE
FRC-45 PRO

Quick Stop

Side adjusting dial (TPS/i only): Power source power correction

F1/F2: Programmable function keys

F2/F4: Programmable function keys

Welding mode: Test, without welding, with welding

Traversing direction

Multifunctional dial: Convenient and intuitive selection of parameters and welding speed

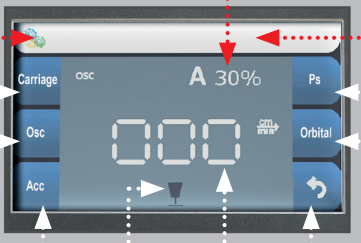

Welding power in % (TPS/i only)

Error message / Quick Stop display

Service menu: Create, load and save welding programs

Arc tab:
Welding power (TPS/i only)
Arc correction (TPS/i only)
Wire threading / wire retraction
Gas test

Carriage menu: Basic settings

Oscillation tab: Parameter setting

Orbital tab: Parameter setting

ACC tab: Parameter setting for monitoring arc length

Back button

Status indicator: Active and inactive arc, test, limit switch indicator

Travel speed

EFFICIENT WELDING WITH TPS/i POWER SOURCES

The innovative high-speed system architecture makes for more precise measuring, analysis and monitoring of the arc. Customers benefit from an extremely low-spatter dip transfer arc process, a quick and safe pulse welding process, perfect ignition, even penetration and much more. In short: welding is more stable, cleaner and quicker.

AUTOMATIC COMPONENT RECOGNITION
PLUG & WELD

Simply plug in with no tools and the power source immediately recognises all available components. It will flag incompatibles if they occur.

HIGH-SPEED COMMUNICATION
SPEEDNET

A high-speed bus allows for an internal system network that guarantees a 200 times faster communication between system components. This makes the welding process easier to analyse and control.

UNRIVALLED SPLATTER PREVENTION
LOW SPATTER CONTROL (LSC)

Particularly low-spatter dip transfer arc process, even with long hosepacks.

IMMENSELY IMPROVED DROPLET DETACHMENT
PULSE MULTI CONTROL (PMC)

Exceptional stability and consistent penetration, even at high welding speeds.

EASY UPGRADE

The easiest upgrades with a USB flash drive or via the internet. For new welding processes, characteristics, applications, firmware updates, etc.

FUTURE ON BOARD

With upgrade functions and high-quality hardware, the TPS/i guarantees 'state-of-the-art' welding processes for years to come.

REMOTE SERVICE

Remote maintenance and system analysis via the internet.

OPTIONS/ADD-ONS/ACCESSORIES

TORCH OSCILLATION UNITS (OSC MODULES)

Two different oscillation modules are available, which can be operated in four different oscillation modes. Both the linear and the radial oscillation modules can be used as left-hand or right-hand versions, depending on the application. Due to the modular design of the carriage, it is possible to add or change the desired oscillation module in just a few steps.

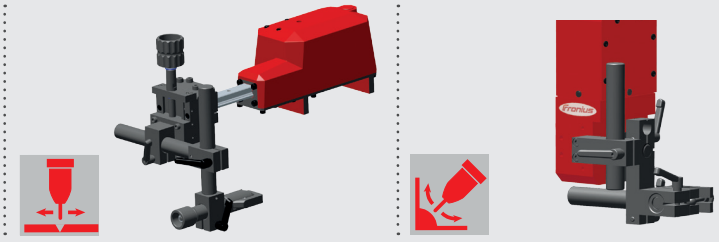

OSC MODULE	FOU 30/ML10 LINEAR OSCILLATION UNIT	FOU 30/ML6 RADIAL OSCILLATION UNIT
Oscillation speed	5 - 400 cm/min	20 - 120 cm/min
Oscillation path	2 - 30 mm	1 - 30 mm
Offset	0 - 50 mm	0 - 50 mm
Dwell time	0 - 3 seconds	0 - 3 seconds
Max. load	10 kg	6 kg
Unladen weight (without welding torch holder)	3.2 kg	3.6 kg
Degree of protection	IP 23	IP 23
Oscillation modules	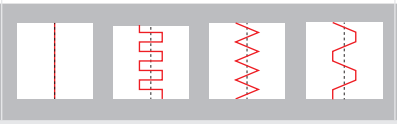	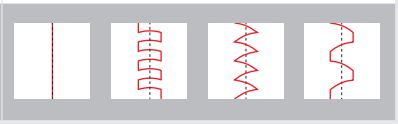

MONITORING THE ARC LENGTH (ACC MODULES)

The ACC module (Arc Current Control) is used for automatic distance control of the welding torch to the workpiece*. The main advantage of this is that the best welding results can be achieved, even on uneven surfaces or with guide rails that are not precisely centrically mounted.

** ACC function only works with steel components, not aluminium materials.*
When using the TPSi power source including PMC and LSC, the penetration and arc stabilizer functions must be deactivated.

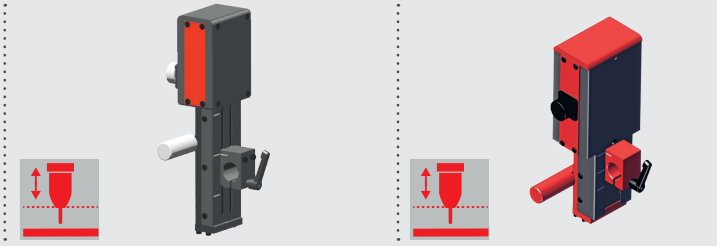

ACC MODULE	FMS 100/ML15/SE/ACC	FMS 50/ML15/SE/ACC
Traversing speed (automatic)	30 cm/min	30 cm/min
Traversing speed (manual)	100 cm/min	100 cm/min
Travel path	5 - 100 mm	Max. 50 mm
Dwell time	1-60 s	1-60 s
Degrees of sensitivity	1 - 9	1 - 9
Control voltage/power consumption	24 VDC/8 W	24 VDC/8 W
Max. load	15 kg	15 kg
Unladen weight	2.45 kg	2 kg
Degree of protection	IP 23	IP 23

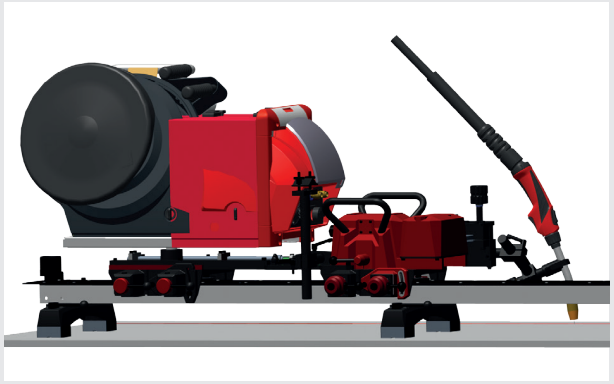

TRAILER FOR WIRE FEEDER

/ For use on rigid rails in PA position
/ For holding the VR 4000, VR 5000 or WF25i wirefeeder

VACUUM PUMP FOR VACUUM BRIDGES

/ Dry-running, oil-free, rotary vane vacuum pump
/ Enough suction for up to 13 vacuum bridges
/ Direct-on-line starter
/ Suction filter and pressure manometer
/ Mains cable with plug (5 m)

VACUUM PUMP	
Max. pumping capacity	25 m³/h
Final pressure	120 mbar
Mains voltage 50 - 60 Hz	3 x 200 - 240 / 346 - 420 V
Power consumption	900 W
Mains cable with plug	5 m
A (height)	406 mm
B (length)	547 mm
C (width)	307 mm
Unladen weight	31 kg
Degree of protection	IP 23

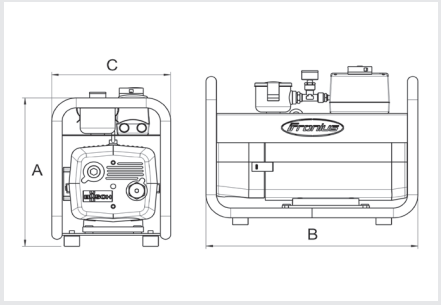

TRANSPORT CASE

/ Robust and convenient plastic housing
/ Foam insert to protect the carriage
/ Rollers for convenient transport

RAIL SYSTEMS

There are three different rail configurations to choose from, depending on the application: flexible, straight and ring (orbital). The carriage is quick and easy to install in every configuration; only the guide rollers need to be adjusted.

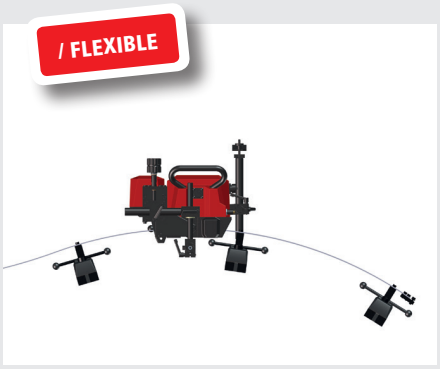

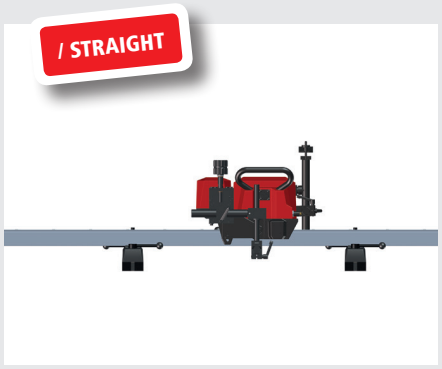

FLEXIBLE RAILS

Rails for components with flat or curved surfaces with an inner radius of at least 1500 mm and an external radius of at least 1100 mm.

Three rail lengths: 1130/1695/1884 mm

STRAIGHT RAILS

Straight, rigid rails with aluminium profiles for vertical or horizontal use.

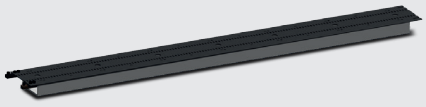

Rail length: 1884 mm

RING RAILS

1 **Ring rails from flexible segments.**
For internal and external pipe welding.

Component diameter of 1560 - 6060 mm

2 **Ring rails from ring segments with straight aluminium profiles.**
The rail segments are equipped with quick clamps for speedy assembly. Eight segment versions are available.

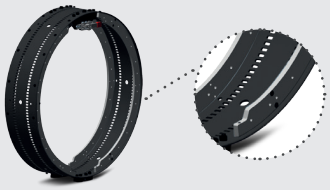

Component diameter of 200 - 1560 mm

3 **Ring rails from ring segments with a fixed radius.**
Pre-contoured rail segments with pre-fitted bridge elements and quick-clamping system are especially quick and easy to attach to the component.

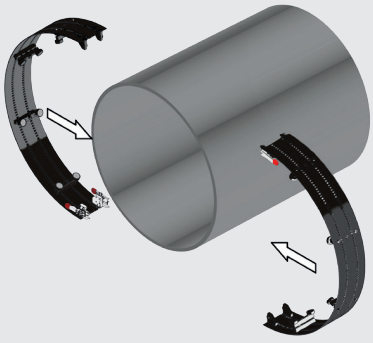

Component diameter of 254 - 1778 mm

ASSEMBLY BRIDGES

RING SEGMENTS FIXED RADIUS

MAGNETIC BRIDGE

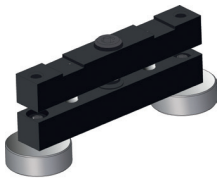

Magnetic bridges for ring segments with a fixed radius for mounting on ferritic components. Height adjustment: 10 mm.

SPRING HOLDER

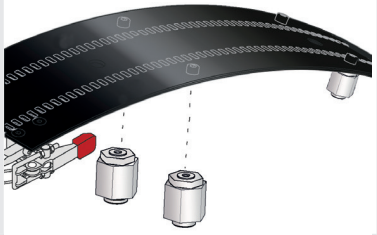

Spring pressure spacer for ring segments with a fixed radius. Can also be used with non-ferritic components.

FLEXIBLE &RIGID RAILS

MAGNETIC BRIDGE

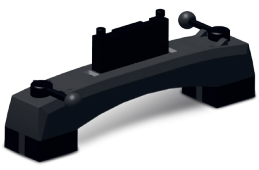

For ferritic components. Heat-resistant up to 180 °C. The magnetic force is controlled by a lever.

VACUUM BRIDGE

Components with a smooth surface such as aluminium or stainless steel. Operating temperature of 0 °C to 120 °C (optional from –30 °C to 250 °C).

BRIDGE WITH ADJUSTABLE FOOT

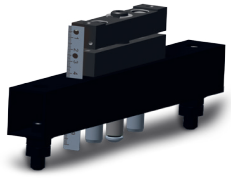

For rigid rings with a diameter up to 840 mm.

TECHNICAL DATA

FLEXTRACK 45 PRO	
CARRIAGE	
Welding position	PA, PB, PC, PF, PG
Material thickness	min. 4 mm
Traversing speed, horizontal	5 - 300 cm/min
Traversing speed, vertical	5 - 250 cm/min
End-crater filling time	0 - 5 seconds
Max. load, horizontal/vertical	45/30 kg
Weight (without torch holder)	8.5 kg
Degree of protection	IP 23
Operating temperature	0 – 50 °C
CONTROL BOX	
Supply voltage 50 - 60 Hz	115/230 V
Supply voltage	24 V DC
Weight (without cable)	4.5 kg
Degree of protection	IP 23
REMOTE CONTROL	
Cable length	10 m
Weight (without cable)	1.5 kg
Degree of protection	IP 23
Operating temperature	0 – 50 °C
DIMENSIONS	
A (with linear oscillation unit) (without linear oscillation unit)	469 - 556 mm 452 - 542 mm
B (with linear oscillation unit) (without linear oscillation unit)	56 - 240 mm 80 - 263 mm
C (with linear oscillation unit) (without linear oscillation unit)	357 mm 342 mm
D (with linear oscillation unit) (without linear oscillation unit)	239 mm 270 mm
E (overall height with straight, rigid rails)	313 mm
F (overall height with magnetic bridge)	310 - 408 mm
G (overall height with adjustable foot bridge)	310 - 408 mm
H (with radial oscillation unit) (without radial oscillation unit)	543 - 653 mm 452 - 542 mm
I (with radial oscillation unit) (without radial oscillation unit)	191 - 311 mm 80 - 263 mm
J (with radial oscillation unit)	243 - 363 mm

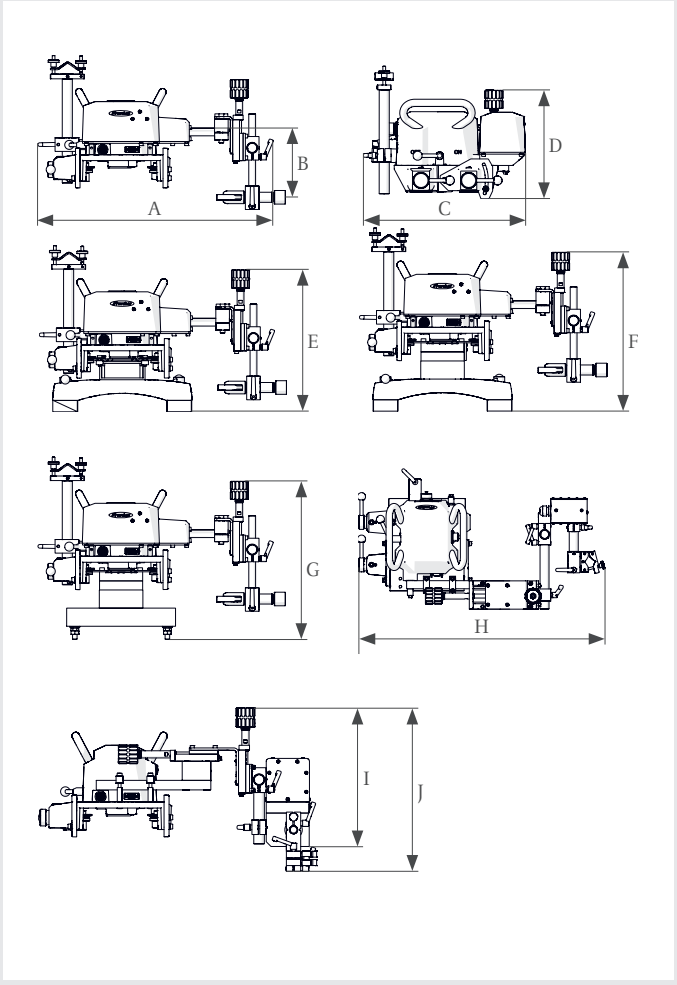

/ Perfect Welding / Solar Energy / Perfect Charging

THREE BUSINESS UNITS, ONE GOAL: TO SET THE STANDARD THROUGH TECHNOLOGICAL ADVANCEMENT.

What began in 1945 as a one-man operation now sets technological standards in the fields of welding technology, photovoltaics and battery charging. Today, the company has around 4,760 employees worldwide and 1,253 patents for product development show the innovative spirit within the company. Sustainable development means for us to implement environmentally relevant and social aspects equally with economic factors. Our goal has remained constant throughout: to be the innovation leader.

Further information about all Fronius products and our global sales partners and representatives can be found at **www.fronius.com**

Text and images correspond to the current state of technology at the time of printing. Subject to modifications.
All information is without guarantee in spite of careful editing. liability excluded. Copyright © 2011 Fronius™. All rights reserved.

Fronius India Private Limited
GAT no 312, Nanekarwadi
Chakan, Taluka - Khed District
Pune 410501
India
Telephone + 91 98 20 60 52 07
sales.india@fronius.com
www.fronius.in

Fronius (Thailand) Ltd.
Pinthong Industrial Estate I
789/193 Moo 1, Sriracha,
Chonburi 20230
Building: P17/B1
Thailand
Telephone +66 (033) 047421
sales.Thailand@fronius.com
www.fronius.co.th

Fronius Middle East FZE
P.O. Box: 263241
Jebel Ali / JAFZA ONE BUILDING
Dubai / U.A.E
Telephone +971 (0) 56 499 8224
contact.middleeast@fronius.com
www.fronius.ae/pw

Fronius Canada Ltd.
2875 Argentia Road, Units 4,5 & 6
Mississauga, ON L5N 8G6
Canada
Telephone +1 905 288-2100
Fax +1 905 288-2101
sales.canada@fronius.com
www.fronius.ca

Fronius USA LLC
6797 Fronius Drive
Portage, IN 46368
USA
Telephone +1 877 FRONIUS
sales.usa@fronius.com
www.fronius-usa.com

Fronius UK Limited
Maidstone Road, Kingston
Milton Keynes, MK10 0BD
United Kingdom
Telephone +44 1908 512 300
Fax +44 1908 512 329
info-uk@fronius.com
www.fronius.co.uk

Fronius International GmbH
Froniusplatz 1
4600 Wels
Austria
Telephone +43 7242 241-0
Fax +43 7242 241-953940
sales@fronius.com
www.fronius.com

aw21